Decoupling Strategy of Multi-dimensional Force Sensor Based on LS-SVM and α th-order Inverse System Method

Zhang Jingzhu[1] Guo Kai[2] Xu Cheng[1]
（1. Nanjing University of Science and Technology, Nanjing 210094）
（2. Nanjing Department of Artillery Academy of PLA, Nanjing 211132）

Abstract: The coupling of multi-component force sensor is a key factor to limiting its measuring precision. It has become a popular direction of study. The α th-order inverse system decoupling strategy is newly proposed in the paper. One strong coupling MIMO system is decoupled into a number of 2nd-order integral subsystems. The dynamic calibration experiments should be processed by applying loads on the force sensor. In this way, the dynamic character of force sensor would be caught. The dynamic relations among inverse system could be indicated with integrators. Static nonlinear function's approximation of correspondence of inverse system is implemented via training learning network of LS-SVM. Finally, the decoupling of force sensor was realized. Simulation examples verified the availability of the method.

Keywords: Multi-dimensional force sensor; decoupling; LS-SVM; inverse system method.

1 Introduction

There exists coupling in different extent between every force of sensor and sensor output due to be impacted by design principle and fabrication, which is key factor to limiting its measuring precision. And the coupling is complex to describe quantitatively. It has become a popular study field. The coupling of multi-dimensional force sensor consist two aspects, static coupling and dynamic coupling. The research on static coupling is profound at the present time, and it has been generalized utilized in the engineering practice.

In recent years, many scholars have studied the dynamic decoupling approach. The constance dynamic decoupling method has been presented is present (1999)[1], the stationary and dynamic united decoupling and compensating method has also been presented by Xu Kejun(2000)[2]. The ANN α th-order inverse system decoupling method is adopt to control robot by Dai Xianzhong(2001)[3].

The α th-order inverse system decoupling strategy is newly proposed in the paper. The method converts one strongly coupled MIMO system into a number of 2nd-order integral subsystems. The dynamic calibration experiments should be processed by applying loads to the force sensor which could be step loads or square wave loads. In this way, the dynamic character of force sensor would be caught. The dynamic relations among inverse system could be indicated with integrators.

The LS-SVM regression algorithm has well nonlinear approximation ability. Static nonlinear function's approximation of the correspondence of inverse system is implemented via training learning network of LS-SVM. Finally, the decoupling of force sensor is realized.

2 LS-SVM Approximation Algorithm

Support Vector Machine (SVM) is a novel machine learning method, which is powerful for the problem characterized by small sample, nonlinearity, high dimension and local minima, and has high generalization[4,5]. As one kind of Support Vector Machine, LS-SVM algorithm's loss function is quadratic term of error[6].

Consider the problem of approximating the set of data,

$$D=\{(x_1,y_1),\cdots,(x_k,y_k)\},\quad x\in\mathbb{R}^n,\ y\in\mathbb{R}.$$

1-4244-1135-1/07/$25.00 ©2007 IEEE.

Using nonlinear mapping function $\phi(\cdot)$, map the original space R^n into feature space $\phi(x)=(\varphi(x_1),\varphi(x_2),\cdots,\varphi(x_k))$. A linear function estimation is defined as,

$$f(x_i)=\omega\cdot\phi(x_i)+b \tag{1}$$

where $\omega=(\omega_1,\omega_2,\cdots,\omega_m)$ is the weight function. The optimal problem is given by,

$$\min J(\omega,\xi)=\frac{1}{2}\omega^T\omega+c\frac{1}{2}\xi_i^T\xi_i$$

$$s.t.\quad y_i=\omega\varphi(x_i)+b+\xi_i \qquad i=1,2,\cdots,l \tag{2}$$

where ξ_i is error vector, regularization parameter c denotes an arbitrary positive real constant. The conditions for optimality lead to a set of solutions:

$$\begin{bmatrix}0\\y\end{bmatrix}=\begin{bmatrix}b\\\lambda\end{bmatrix}\begin{bmatrix}0 & 1^T\\1 & K+c^{-1}E\end{bmatrix} \tag{3}$$

where $\lambda=[\lambda_1,\lambda_2,\cdots,\lambda_l]^T$, $1^T=[1,\cdots,1]^T$. Application of the Mercer conditions (Mercer, 1909) yields

$$K(x_i,x_j)=\varphi(x_i)^T\cdot\varphi(x_j) \tag{4}$$

The approximation function is obtained with,

$$f(x)=\sum_{i=1}^{l}\lambda_i K(x,x_j)+b \tag{5}$$

3 Decoupling Strategy

Given a general system Σ : $f(U^{(\alpha)},U_\Sigma,Q)=0$, with m-dimensional inputs $Q=[q_1,q_2,\cdots,q_m]^T$ and n-dimensional outputs $U=[u_1,u_2,\cdots,q_n]^T$ .Where the variable is presented as,

$$U^{(\alpha)}=[u_1^{(\alpha_1)},u_2^{(\alpha_2)},\cdots,u_n^{(\alpha_n)}]^T \tag{6}$$

$$U_\Sigma=[U_1,U_1,\cdots,U_m]^T \tag{7}$$

$$U_i=[u_i,u_i^{(1)},\cdots,u_i^{(\alpha_i-1)}] \qquad i=1,2,\cdots,n \tag{8}$$

$$\alpha=[\alpha_1,\alpha_2,\cdots,\alpha_n] \tag{9}$$

If the system Σ is invertible, the α th-order integrator inverse system will be denoted as,

$$Q=g(U^{(\alpha)},U_\Sigma) \tag{10}$$

Let $\varphi=U^{(\alpha)}$ be the input, and u_i be the output. A pseudo-linear composite system is obtained by connecting a α th-order integrator inverse system with its original system, which has transfer function,

$$G^*(s)=diag\left\{S^{-\alpha_1},S^{-\alpha_2},\cdots,S^{-\alpha_n}\right\} \tag{11}$$

So, the composite system comprises a series of pseudo-linear SISO subsystem by combining α th-order integrator inverse system with the original system. In order to implement easily, let $\alpha=[2,\cdots,2]_{1\times n}$. One proper 2nd-order integrator inverse system is connected in series before the multi-dimensional force sensor system according to inverse system theory. In this way, the composite system converts into some 2nd-order subsystems. The decoupling of the original system can be realized.

The decoupling of multi-dimensional force can be implemented when the dynamic character of force sensor is not known or can't be measured easily. Figure 1 shows the decoupling principle of α th-order inverse system of multi-dimensional force sensor.

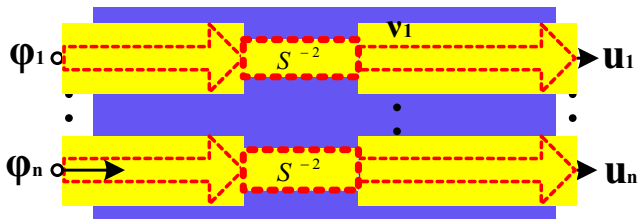

Fig 1 Decoupling principle of α th-order inverse system

Figure 2 indicates the structural diagram of α th-order inverse system compound decoupling system of multi-axis force sensor.

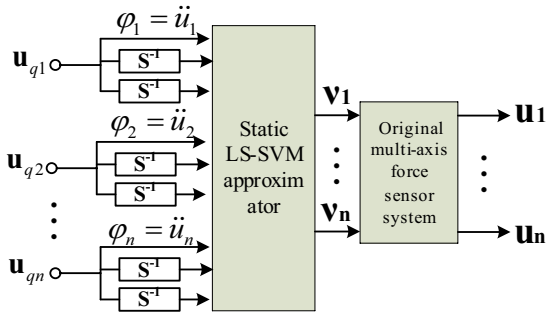

Fig 2 Structural diagram of α th-order inverse system compound decoupling system of multi-axis force sensor

Dynamic LS-SVM learning network is built

depend on LS-SVM regression algorithm's well nonlinear approximation ability, and nonlinear approximation function $\mu(\cdot)$ is presented in the paper. Static nonlinear function's approximation of the correspondence of inverse system is implemented via training learning network of LS-SVM. The dynamic relations among inverse system could be indicated with integrators. The decoupling of multi-dimensional force can be implemented when the dynamic character of force sensor is not known or can't be measured easily.

4 Decoupling Implementation

Performance evaluation of multi-dimensional force sensor can be processed on the ground of its dynamic model. Key problem of dynamic decoupling is how to capture the dynamic characters of multi-dimensional force sensor. The decoupling implementation procedure of multi-dimensional force sensor as follow:

Step 1: Dynamic calibration experiments of multi-dimensional sensor should be carried out by applying loads to the force sensor which could be step loads or square wave loads[7]. In this way, the dynamic characters of force sensor would be caught. The training datasets would be achieved by sampling with definite sample frequency.

Step 2: Calculate the one-order and two-order derivatives of each output to achieve the required training datasets after high-order filtering[3,8]. The training dataset $\{u_1, \dot{u}_1, \ddot{u}_1, \cdots, \cdots, u_n, \dot{u}_n, \ddot{u}_n\}$ and $\{u_{q1}, u_{q2}, \cdots, u_{qn}\}$ would be obtained after reconstructing the upper data.

Step 3: Train the LS-SVM learning network. Gaussian kernel function is selected with the form,

$$k(x, x_i) = \exp\left\{-\|x - x_i\|^2 / \sigma^2\right\}.$$

where σ is the kernel parameter. Different parameter sets are selected from initially confirmed normalized parameter sets and kernel parameter sets according to the cross-verification method [9], train the LS-SVM learning network. The best parameter sets can be fixed, which can be used to train inverse system model of LS-SVM, until it has adequate training accuracy. Finally, the decoupling of force sensor is realized.

5 Simulation Examples

Simulation examples have been presented in order to verify the validity of the method. Coupling effect between arbitrary two dimensions is considered. Ideal 2-channel couple system is built with the form,

$$\begin{cases} G_{11}(s) = \dfrac{600s + 2.5\times10^7}{s^2 + 1000s + 2.5\times10^7} \\ G_{12}(s) = \dfrac{500s + 4\times10^6}{s^2 + 864s + 2.304\times10^7} \\ G_{21}(s) = \dfrac{400s + 6\times10^4}{s^2 + 960s + 2.304\times10^7} \\ G_{22}(s) = \dfrac{700s + 2.401\times10^7}{s^2 + 1176s + 2.401\times10^7} \end{cases}$$

Thus, 2nd-order and 2-channel LS-SVM learning network is constructed. Firstly, dynamic calibration simulated experiments are proceeded by applying unit step loads. 800 sets of data can be obtained through sampling with sample period being 0.05ms. LS-SVM learning network is trained with $c = 10$ and $\sigma = 0.5$. The decoupling results with unit step loads are illustrated in Fig 3. It is easy to see that decoupling effect is obvious, which proves the availability of the method.

6 Conclusion

The α th-order inverse system decoupling approach was proposed in the paper. One strong coupling MIMO system was decoupled into a number of 2nd-order integral subsystems by the α th-order

inverse system method. Static nonlinear function's approximation of the correspondence of inverse system is implemented via training learning network of LS-SVM. The dynamic relations among inverse system could be indicated with integrators, and we can capture the dynamic character of force sensor by dynamic calibration experiments. The decoupling of multi-dimensional force sensor can be implemented. A simulation case show the method is effective. The method is new idea to implement decoupling of multi-dimension force sensor.

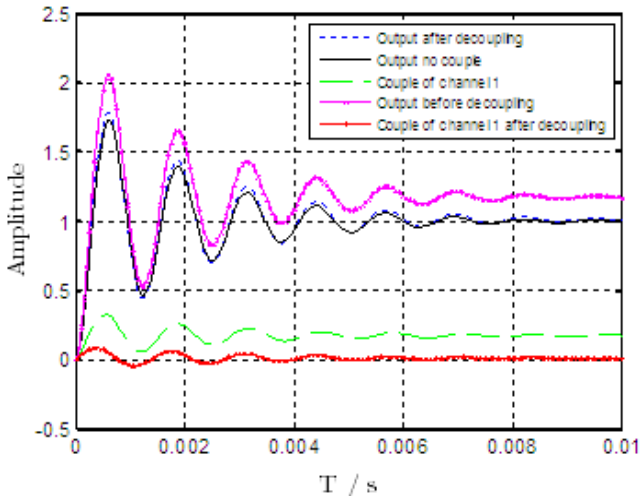

(a) Channel 1

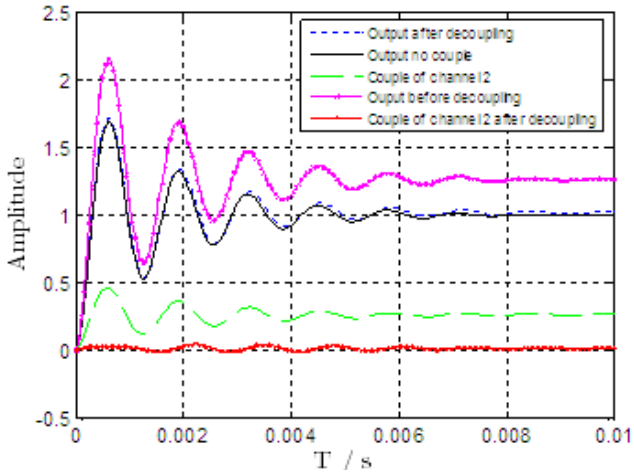

(b) Channel 2

Fig 3 Decoupling results with unit step loads

Acknowledgments

The authors would like to acknowledge support from the Associative Funds for the National Nature Science Foundation of China and the Engineering Physical Research Institute of China (No. 10576039).

References

[1] Xu Kejun, Yin Ming. A Kind of Dynamic Decoupling Method for Wrist Force Sensor. Journal of Applied Sciences, Vol.17, No 1: 39～44, 1999.

[2] Xu Kejun ,Li Chen. The stationary and dynamic united decoupling and compensating method in a multi-axis force sensor. Journal of Applied Sciences, Vol.18, No 3: 189～191, 2000.

[3] Dai Xianzhong, Meng Zhengda, et al. Robot decoupling control based on ANN αth-order inverse system method. Robot, Vol.23, No 4: 363～367, 2001.

[4] Vapnik V N. The Nature of statistical learning theory. New York Springer-Verlag, 1999, Second Edition.

[5] Suykens, J.A.K. Support vector machines: a nonlinear modeling and control perspective. European Journal of Control, Vol.7, No 2-3: 311～327, 2001.

[6] Suykens, J.A.K, Gestel, T., de Brabanter, et al. Least squares support vector machines. World Scientific, 2002, Singapore.

[7] Wu Dehui, et al. Dynamic model identification method based on SVM for sensors. Chinese Journal of Sensors and Actuators, Vol.19, No 3: 716～719, 2006.

[8] Wen Xiangjun, Zhang Yunong, et al. Nonlinear decoupling control design based on least squares support vector regression. Zhejiang Univ Science A, Vol.7, No 2: 275～284, 2006.

[9] Yan Weiwu, Zhu Hongdong, et al. Soft sensor modeling based on support vector machines. Journal of System Simulation , 2003, 15(10), 1494～1496.

Author Biographies

Zhang jingzhu: He was born in 1978. He is a doctor in the school of Mechanical Engineering at Nanjing University of Science and Technology in China. His research interests are design of six-dimensional force sensor, system dynamic modeling and simulation.